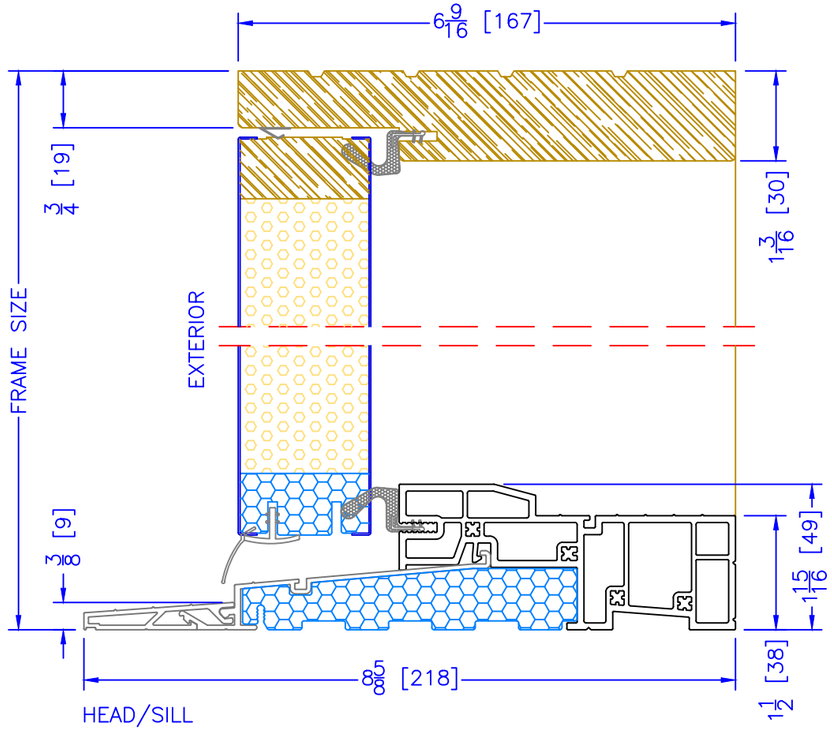

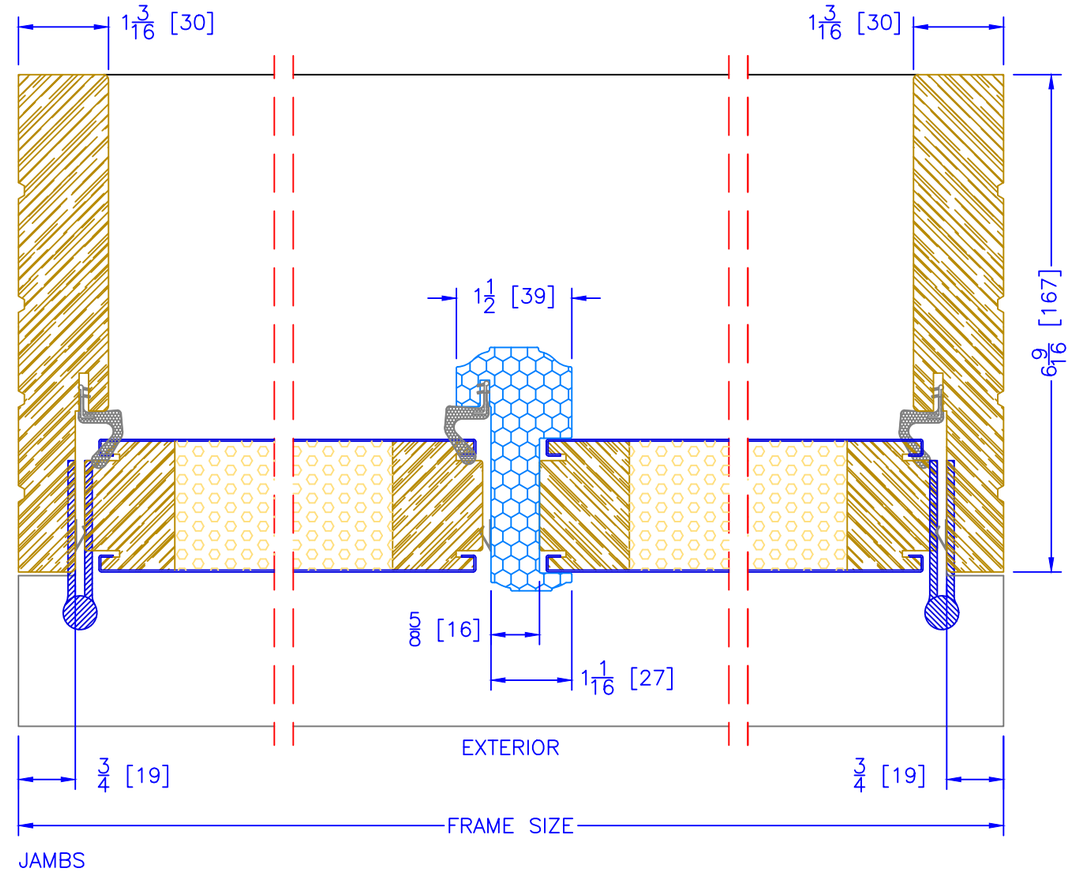

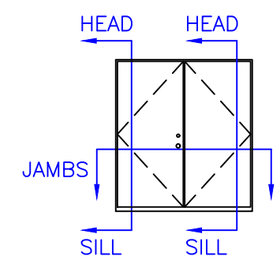

Kohltech Windows & Entrance Systems	Title: WOOD ENTRANCE DOOR 6-9/16" OUTSWING DOUBLE DOOR (or SINGLE w/ FURNITURE SIDELITE) w/ HP SILL	Filename: X_Entrance Doors _Wood Scale: 1:2	Drawn By: LAURA M. Date: JAN 29 2025 Units: Inches [mm]