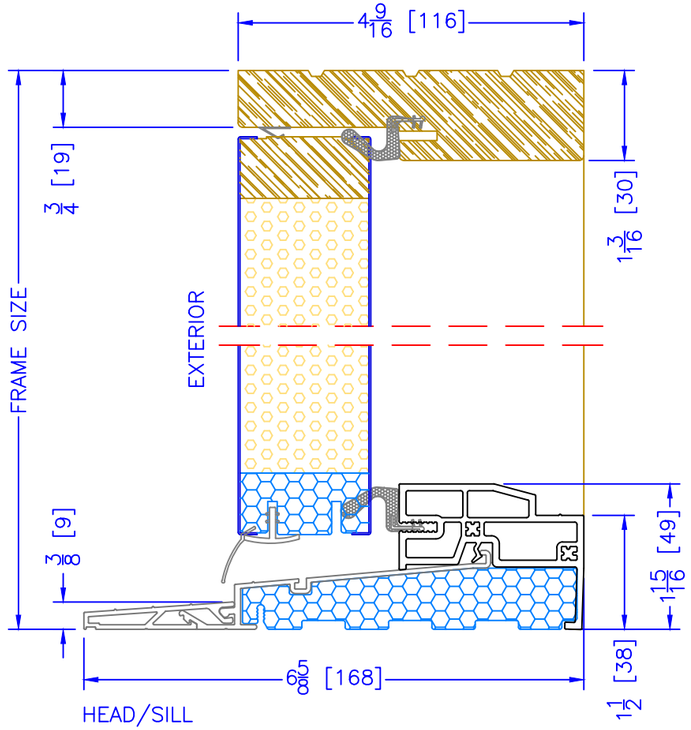

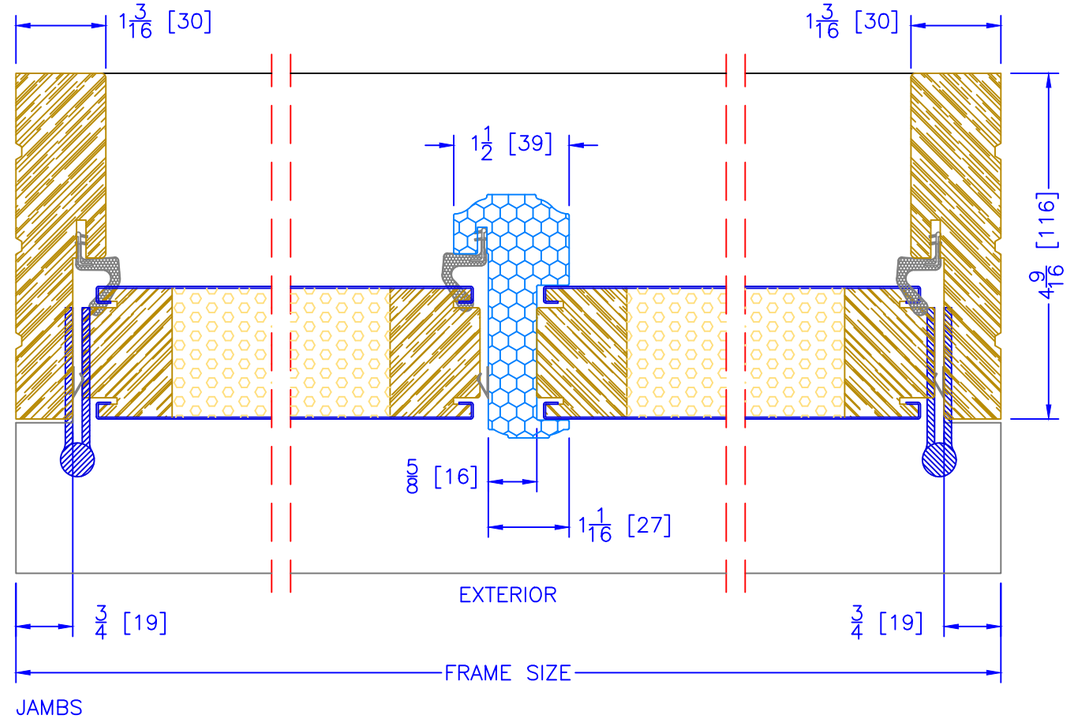

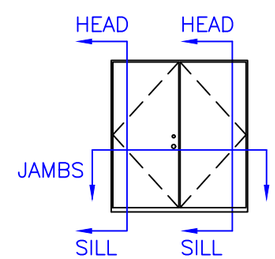

Kohltech Windows & Entrance Systems	Title: WOOD ENTRANCE DOOR 4-9/16" OUTSWING DOUBLE DOOR (or SINGLE w/ FURNITURE SIDELITE) w/ HP SILL	Filename: X_Entrance Doors _Wood	Drawn By: LAURA M.
		Scale: 1:2	Date: JAN 29 2025
			Units: Inches [mm]