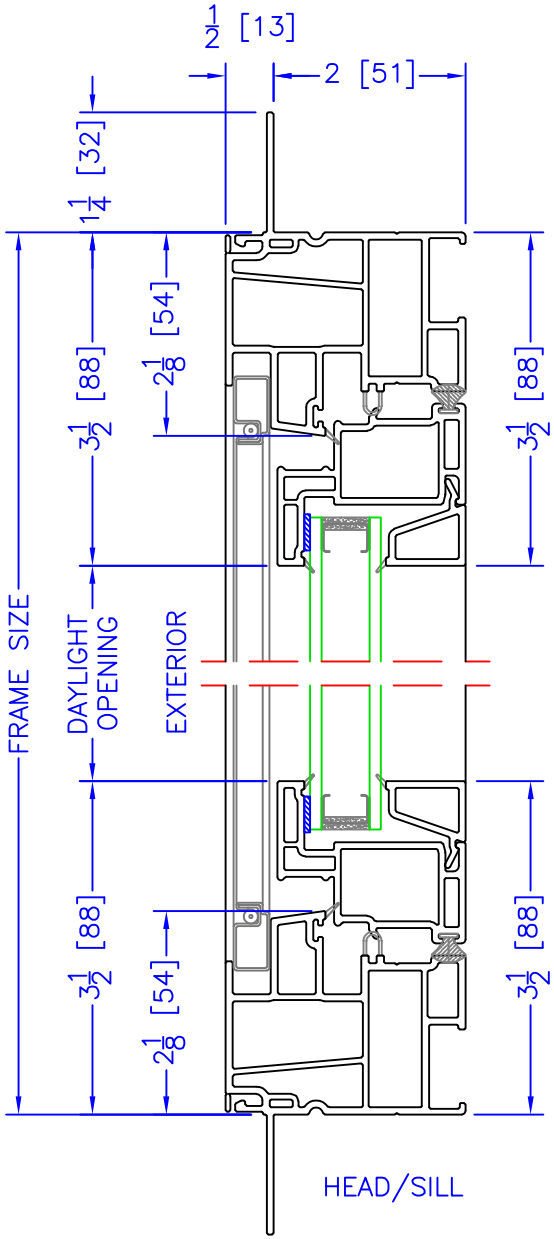

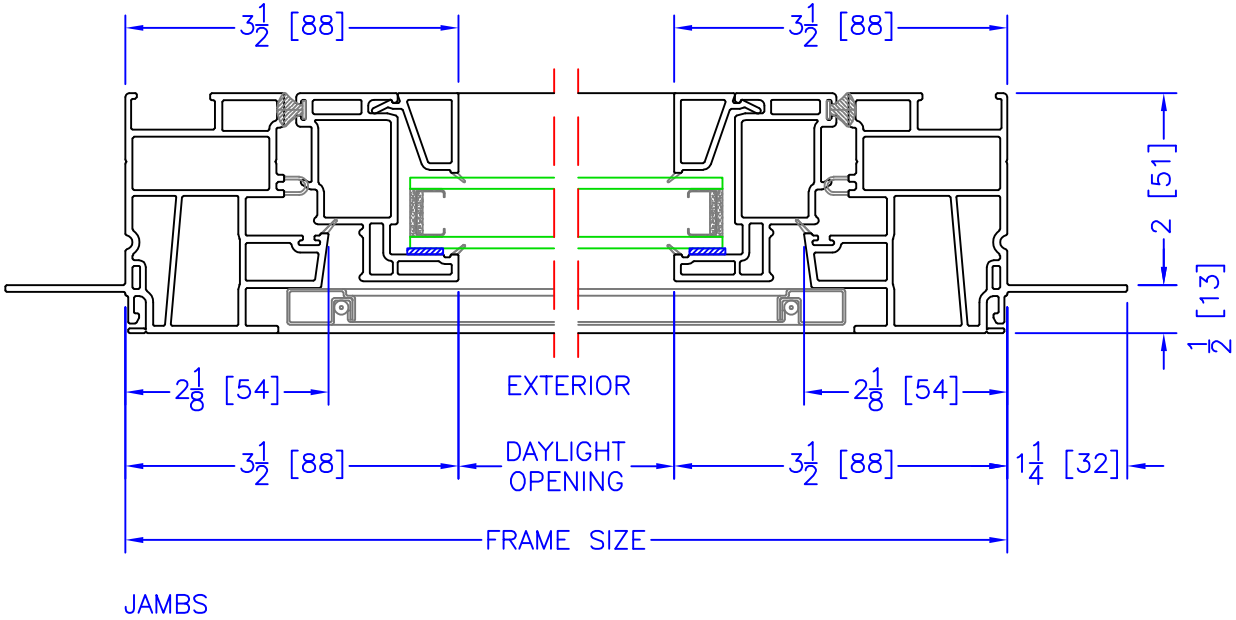

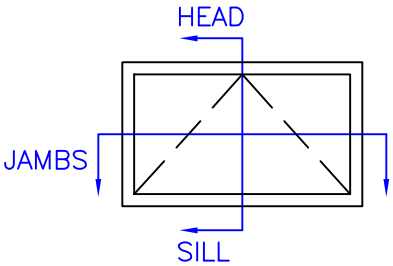

Kohltech Windows & Entrance Systems	Title: SELECT HOPPER w/ INTEGRAL NAILING FIN HEAD/SILL, JAMB DETAILS	Filename: X_Select Hopper	Drawn By: JOHN S.
			Date: NOV 24/21
		Scale: 1:2	Units: Inches [mm]