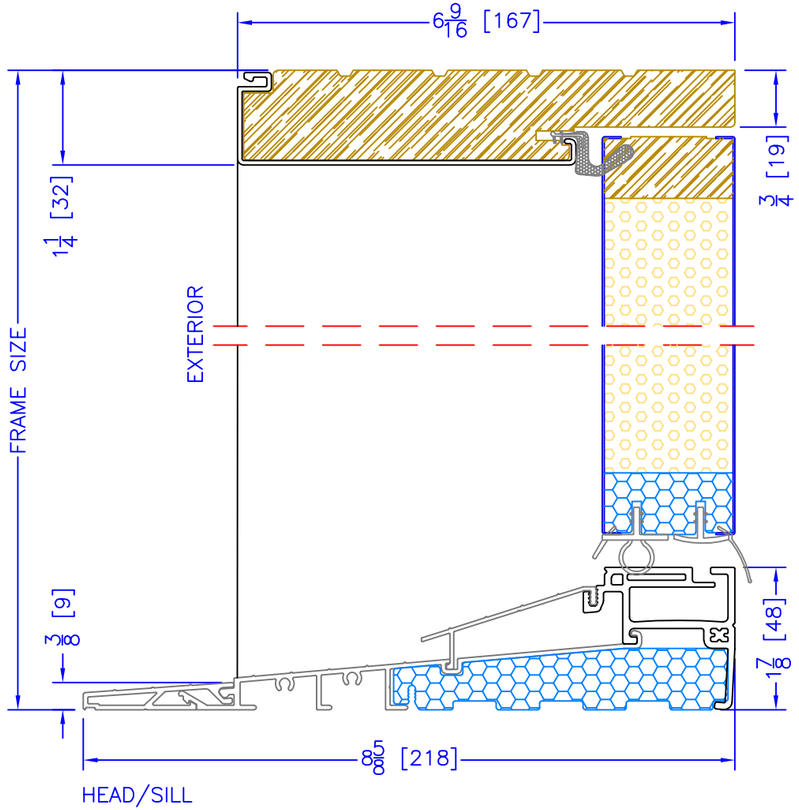

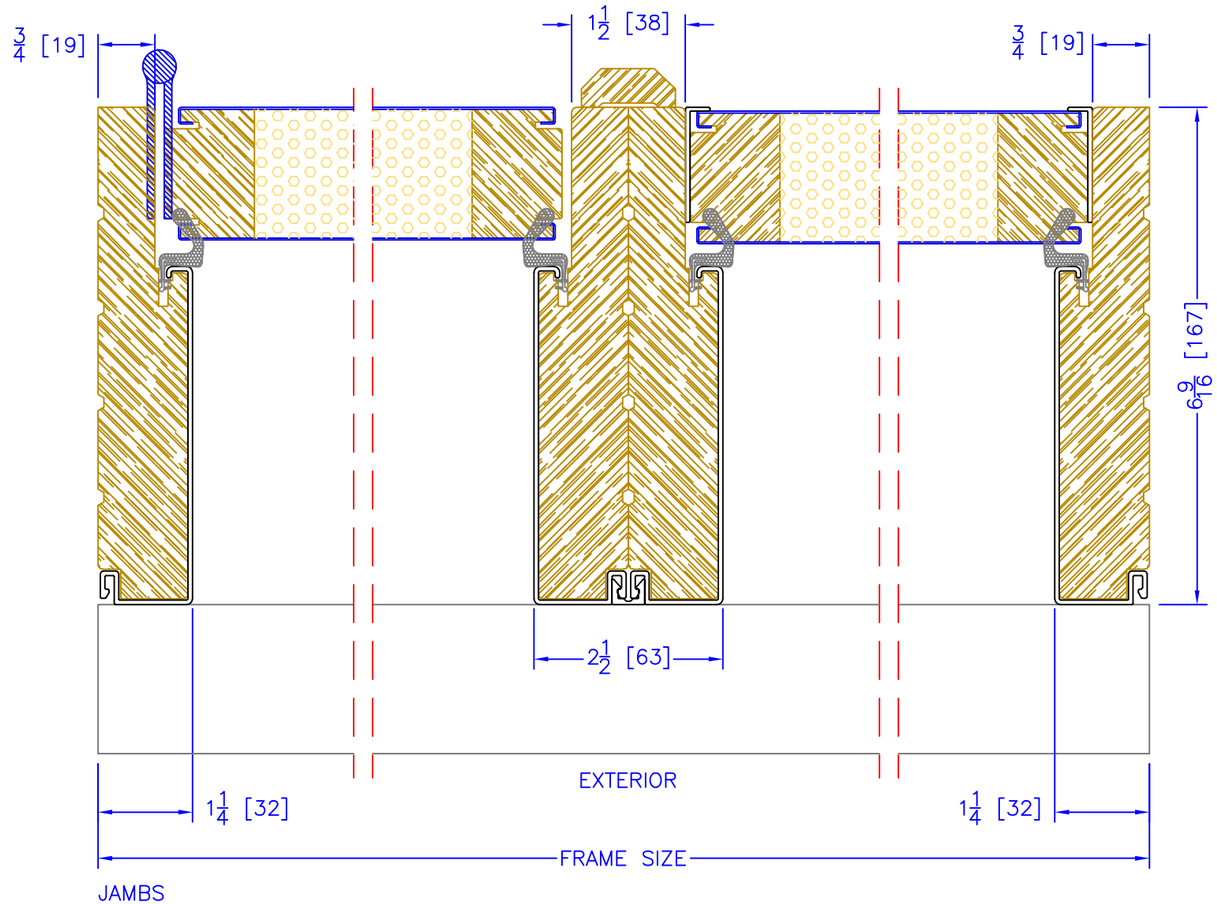

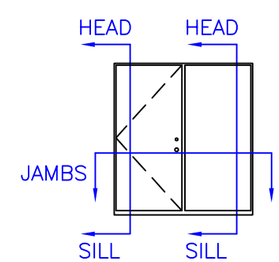

Kohltech Windows & Entrance Systems	Title: VINYL CLAD ENTRANCE DOOR 6-5/8" INSWING GARDEN DOOR w/ HP SILL	Filename: X_Entrance Doors _Vinyl Clad Scale: 1:2	Drawn By: JOHN S. Date: DEC 15 2022 Units: Inches [mm]